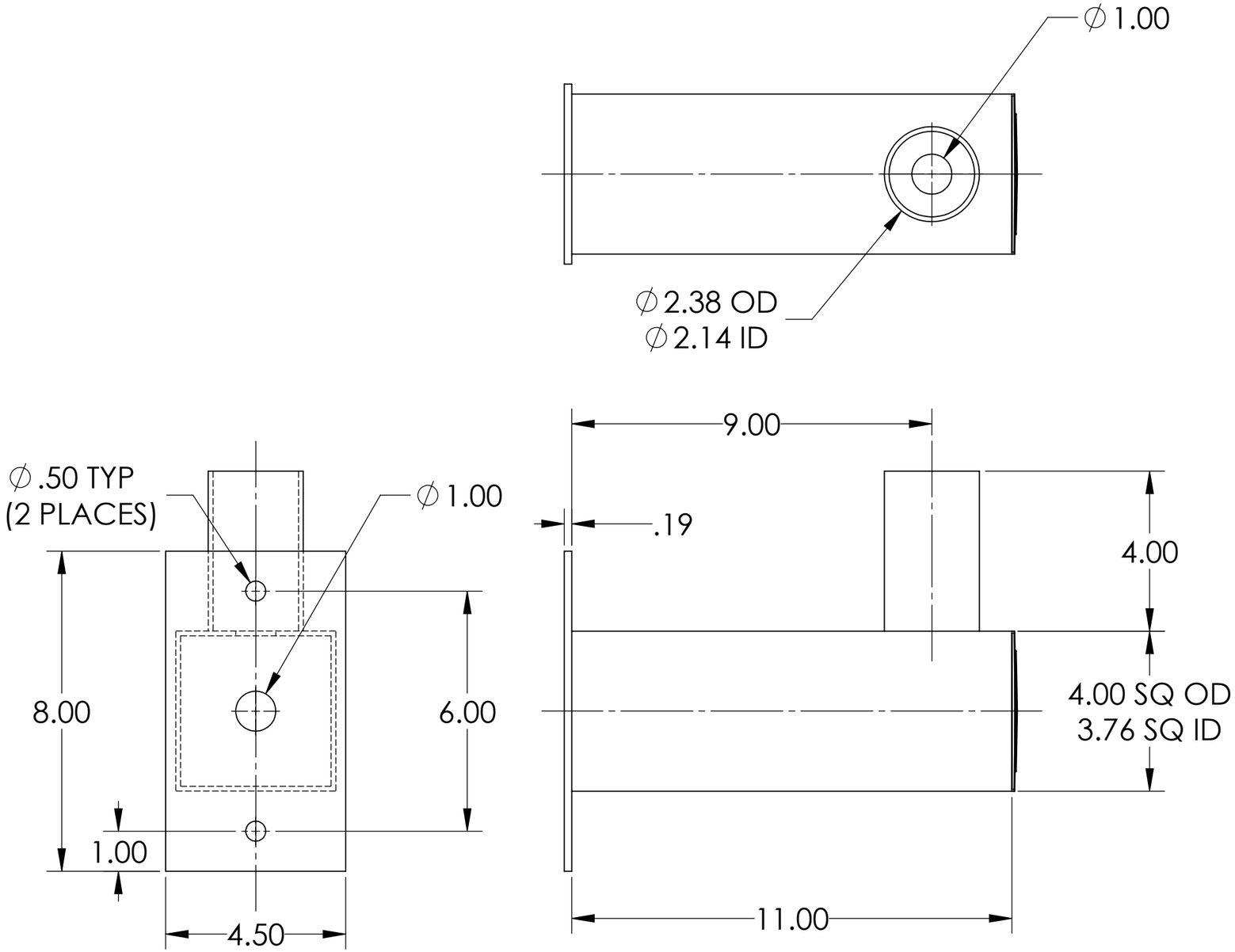

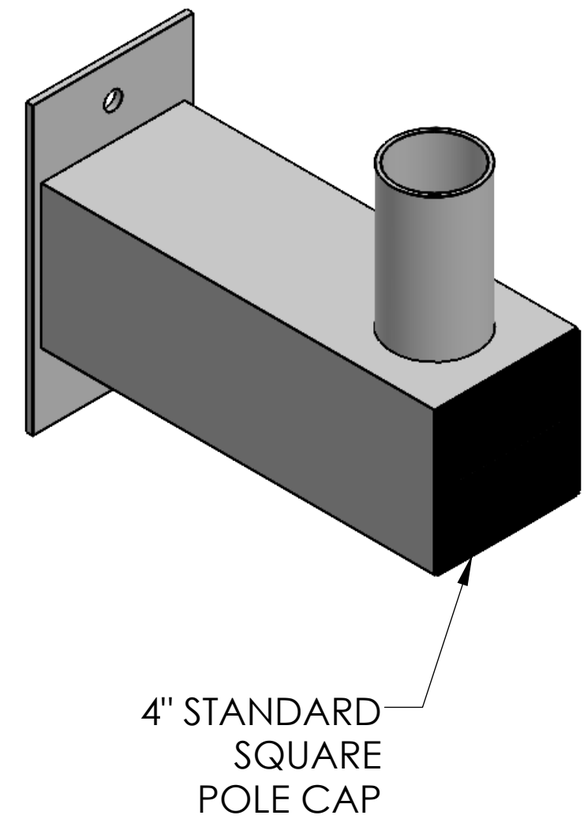

All dimensions and specifications are subject to change without any notice.

PROPRIETARY AND CONFIDENTIAL
THE INFORMATION CONTAINED IN THIS DRAWING IS THE SOLE PROPERTY OF ***Energy Light, Inc.*** ANY REPRODUCTION IN PART OR AS A WHOLE WITHOUT THE WRITTEN PERMISSION OF ***Energy Light, Inc.*** IS PROHIBITED.

NEXT ASSY	USED ON
APPLICATION	

UNLESS OTHERWISE SPECIFIED:
DIMENSIONS ARE IN INCHES
TOLERANCES:
FRACTIONAL ± 1/64
ANGULAR: ± 0.5°
TWO PLACE DECIMAL ±0.01
THREE PLACE DECIMAL ±0.005
INTERPRET GEOMETRIC TOLERANCING PER:
MATERIAL STEEL
FINISH
DO NOT SCALE DRAWING

	NAME	DATE
DRAWN	MKA	11-03-20
ENG APPR.		
MFG APPR.		
Q.A.		

Energy Light, Inc.
1881 Rose Road
Lake Zurich, IL 60047

TITLE:
Steel Tenon Arm for Square Poles

SIZE	ITEM NO.	REV
B	10086	

SCALE: 1:3 | WEIGHT:8.5 lbs | SHEET 1 OF 1